MGL SERVO HARNESS ASSEMBLY, 2 REQUIRED PER INSTALLATION

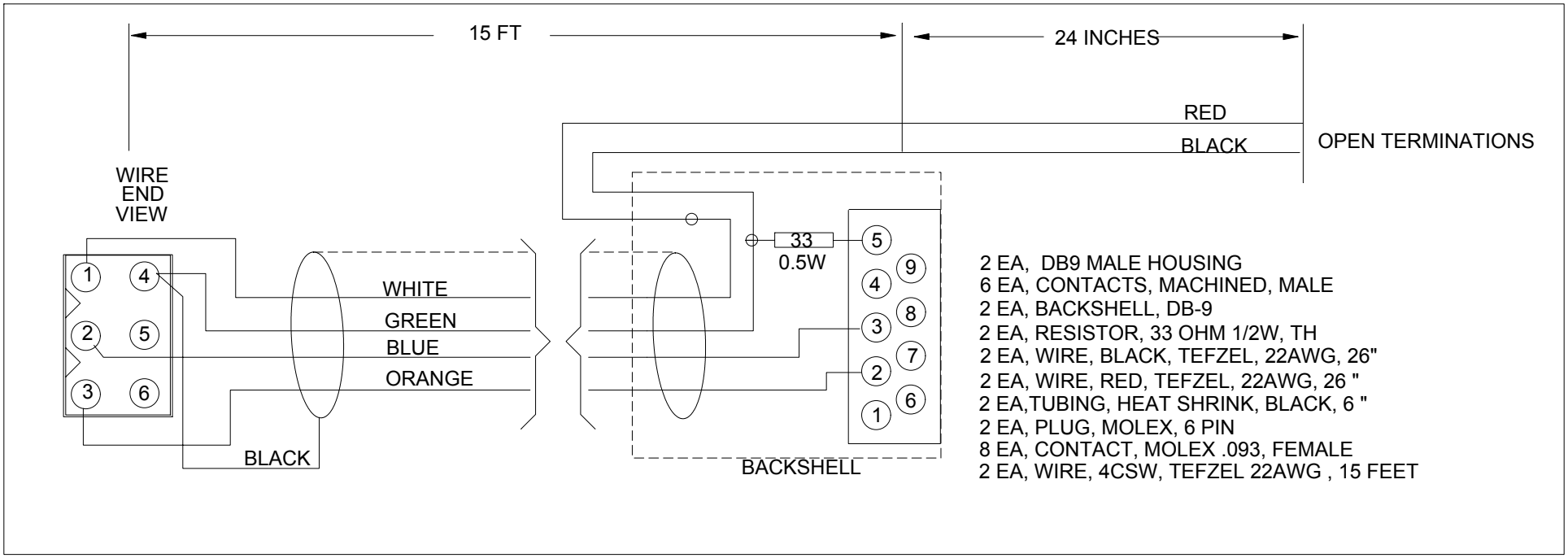

2 EA, DB9 MALE HOUSING
6 EA, CONTACTS, MACHINED, MALE
2 EA, BACKSHELL, DB-9
2 EA, RESISTOR, 33 OHM 1/2W, TH
2 EA, WIRE, BLACK, TEFZEL, 22AWG, 26"
2 EA, WIRE, RED, TEFZEL, 22AWG, 26 "
2 EA,TUBING, HEAT SHRINK, BLACK, 6 "
2 EA, PLUG, MOLEX, 6 PIN
8 EA, CONTACT, MOLEX .093, FEMALE
2 EA, WIRE, 4CSW, TEFZEL 22AWG , 15 FEET